BODY, DASH - Z26NEY99A4/B4/A6/B6 (C0705025-2)

2026 RZR - RZR XP S 1000 ULTIMATE (R01) - Z26NEY99A4/B4/A6/B6

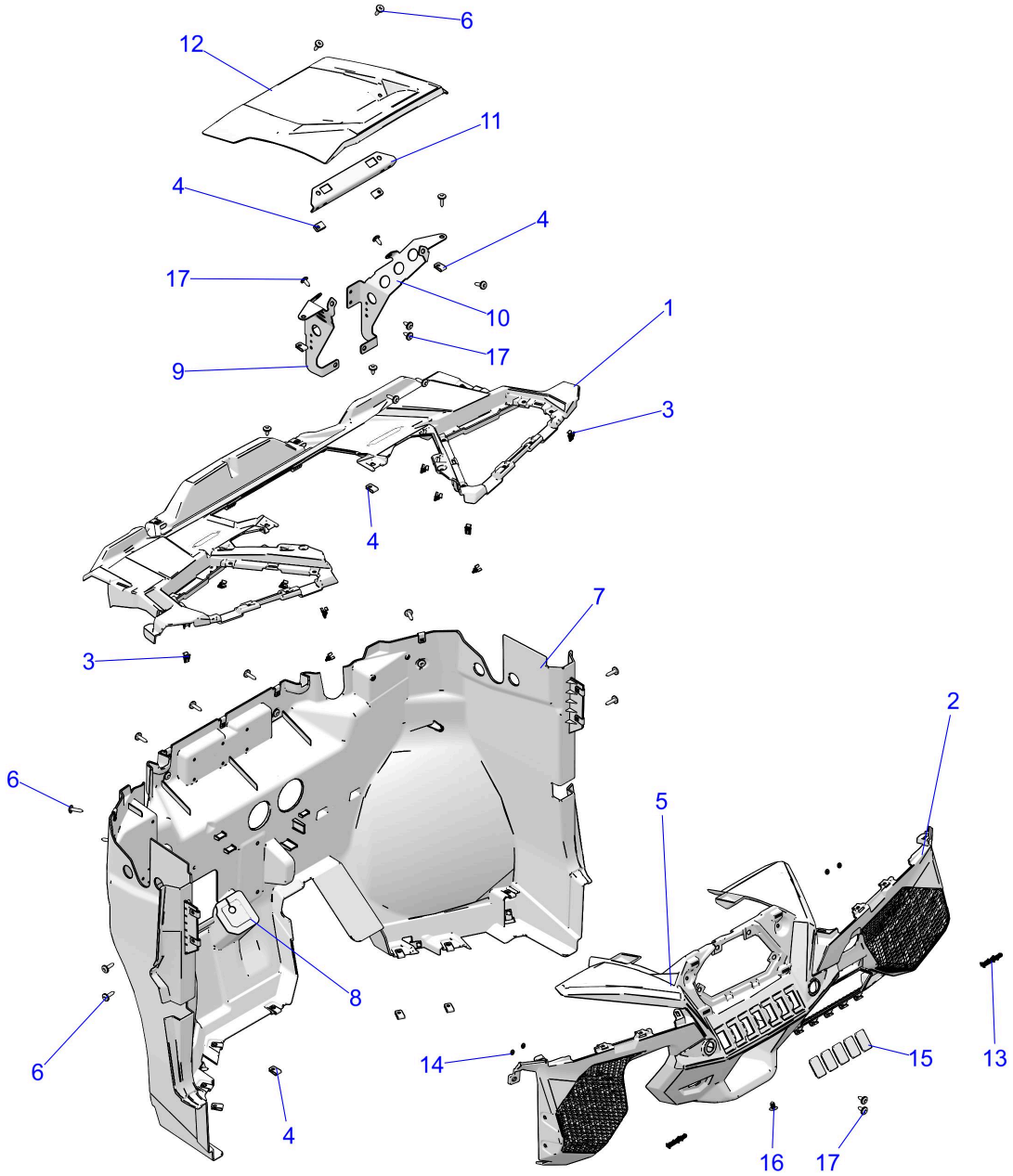

© 2021 Polaris Industries Inc.

C0705025-2

Reference #	*Part#*	*Description*	*Quantity*
1	2638277-070	ASM-UPPER,IP,BLK [INCL. QTY 4 of 4]	1
2	5456561-070	LOWER IP,BLK	1
3	7519806	CLIP-DASH,TRIM,METAL	AR
4	7547674	NUT-M6-1.0, U-TYPE (2.5-3.8)	AR
5	5465240-804	CVR-BZL,CNTR,INNR,MIC,STLTH GR [A4/B4]	1
5	5465240-902	CVR-BZL,CNTR,INNR,MIC,SAND DN [A6/B6]	1
6	7519650	SCR-TXTH-M6X1.0X25 ZFB	AR
7	2639860-070	ASM-FRONT CLOSEOUT,MAIN,BLK [INCL. QTY 20 of 4]	1
8	5419079	BOOT,STEERING	1
9	5270800-329	BRKT-DASH SUPPORT,LH,ECOAT	1

10	5270801-329	BRKT-DASH SUPPORT,RH,ECOAT	1
11	5272311-329	BRKT-DASH SUPPORT,CROSS,E-COAT	1
12	5459216-070	CENTER IP,BLK	1
13	5458928	BADGE,GRILL,ROCKFORD	2
14	7548088	NUT-PUSH,BADGE	4
15	5453402	COVER-SWITCH,RZT	5
16	7670088	CLIP-PLASTIC DART, NYLON	1
17	7518936	SCR-M6X1X16 TR/TX-M	8

Copyright 1996-2026 Polaris Industries U.S.A All rights reserved.